Low Noise Bottom Port MEMS Microphone

DESCRIPTION

The ZTS6556 is a high quality, low cost, low power analog output bottom-ported omni-directional MEMS microphone.ZTS6556 consists of a MEMS microphone element and an preamplifier. ZTS6556 has a high SNR and flat wideband frequency response, resulting in natural sound with high intelligibility. Extra EMI filter for RF noise attenuation is built inside. Due to the built-in filter, ZTS6556 shows high immunity to EMI.

The ZTS6556 is available in a thin 2.75mm × 1.85mm × 0.90mm surface-mount package. It is reflow solder compatible with no sensitivity degradation. The ZTS6556 is halide free.

APPLICATIONS

- Mobile telephones
- Smart phones
- PDAs
- Digital video cameras
- Portable media devices with audio input

ORDERING INFORMATION

PART	RoHS	Ship, Quantity
ZTS6556	Yes	Tape and Reel, 5.2K

FEATURES

- Small package
- Flat Frequency Response SNR of 64dBA
- Low Current
- Max RF protection
- Ultra-Stable Performance
- Standard SMD Reflow
- Omni-directional

Pins Configuration and Description

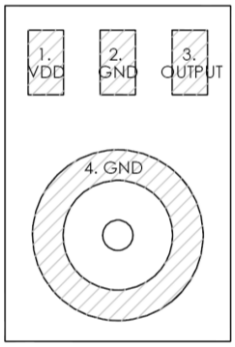

Bottom view

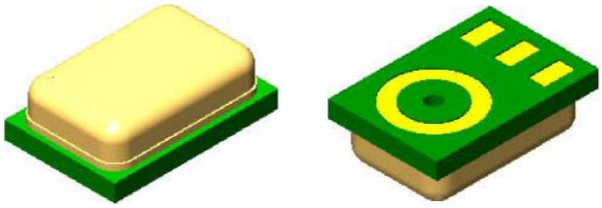

Top Bottom

Typical Applications

The ZTS6556output can be connected to a codec microphone input or to a high input impedance gain stage.
A dc-blocking capacitor is required at the output of the microphone.

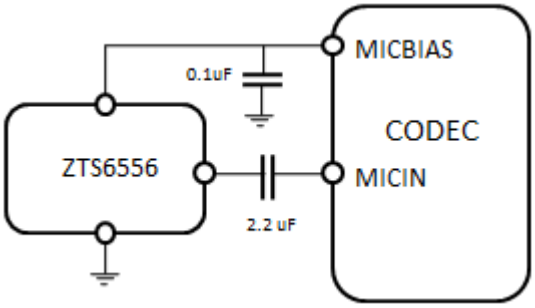

Connect to Audio OPAM

Note:
All Ground pins must be connected to ground.
Capacitors near the microphone should not contain Class 2 dielectrics.

5F,No.6-1,Dusing Rd, Hsinchu Science Park,
Hsinchu City 30078,Taiwan.
Tel: (886) 3577 7509; Fax: (886) 3577 7390
Email: sales@zilltek.com

Absolute Maximum Ratings

V_{DD} to Ground .....-0.5V to +5V
OUT to Ground.....-0.3V to V_{DD}+0.3V
Input Current to Any Pin.....± 5 mA
Temperature Range.....–40°C to +100°C

CAUTION: Stresses above those listed in "Absolute Maximum Ratings" may cause permanent damage to the device. This is a stress only rating and operation of the device at these or any other conditions above those indicated in the operational sections of this specification is not implied.

Functional Block Diagram

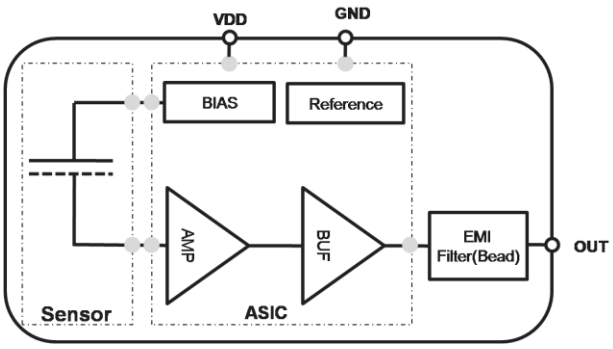

Electro-Static Discharge Sensitivity

This integrated circuit can be damaged by ESD. It is recommended that all integrated circuits be handled with proper precautions. Failure to observe proper handling and installation procedures can cause damage. ESD damage can range from subtle performance degradation to complete device failure.

Pins Description

Pin	Symbol	Description
1	VDD	Power Supply
2	GROUND	Ground
3	OUT	Analog output signal.
4	GROUND	Ground

5F,No.6-1,Dusing Rd, Hsinchu Science Park,
Hsinchu City 30078,Taiwan.
Tel: (886) 3577 7509; Fax: (886) 3577 7390
Email: sales@zilltek.com

Specifications

(TEST CONDITIONS: 23 ±2°C, 55±20% R.H., V_{DD}(min) ≤ V_{DD} ≤ V_{DD}(max), no load, unless otherwise indicated.)

PARAMETER	Symbol	CONDITIONS	MIN	TYP	MAX	UNIT
Supply Voltage[1]	V_{DD}		0.8	-	3.6	V
Supply Current[1,2]	I_{DD}		-	18	-	µA
Sensitivity[1]	S	94 dB SPL @ 1 kHz	-39	-38	-37	dBV/Pa
Signal to Noise Ratio	SNR	94 dB SPL @ 1 kHz,A-weighted	-	64	-	dB(A)
Total Harmonic Distortion	THD	94 dB SPL @ 1 kHz	-	0.2	1	%
Acoustic Over load Point	AOP	10% THD @ 1 kHz		125	-	dB SPL
Power Supply Rejection Ratio	PSRR	200mVpp sinewave @ 1 kHz, V_{DD} = 1.8V	-	65	-	dB
Power Supply Rejection	PSR	100 mVpp square wave@ 217 Hz, V_{DD}= 1.8V,A-weighted	-	-90	-	dBV(A)
DC Output		V_{DD} = 1.5V	-	0.75	-	V
Output Impedance	Z_{OUT}	@ 1 kHz	-	4000	-	
Directivity			Omni-directional			
Polarity		Increasing sound pressure	Increasing output pressure			

Note:

[1] 100% tested

[2] Maximum specifications are measured at maximum V_{DD}. Typical specifications are measured at V_{DD} = 1.8V.

5F,No.6-1,Dusing Rd, Hsinchu Science Park,
Hsinchu City 30078,Taiwan.
Tel: (886) 3577 7509; Fax: (886) 3577 7390
Email: sales@zilltek.com

Typical Performance Characteristics

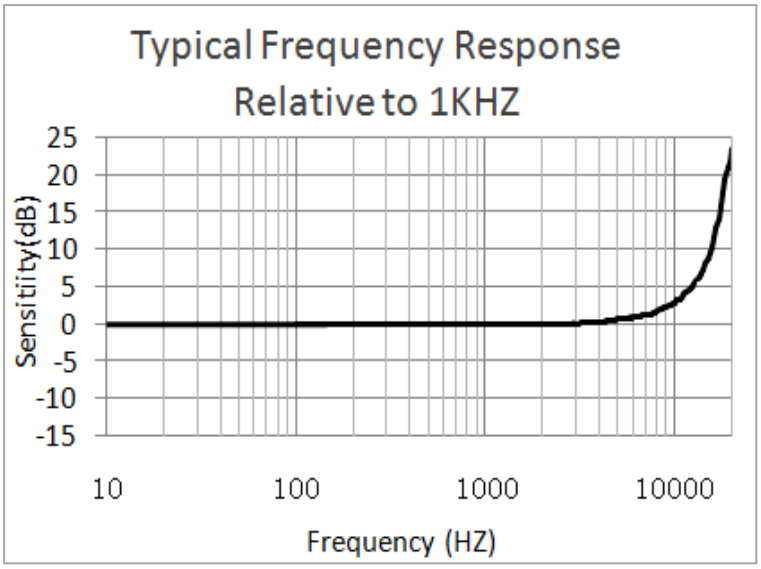

5F,No.6-1,Dusing Rd, Hsinchu Science Park,
Hsinchu City 30078,Taiwan.
Tel: (886) 3577 7509; Fax: (886) 3577 7390
Email: sales@zilltek.com

Reliability Specifications

The microphone sensitivity after stress must deviate by no more than ±3dB from the initial value.

1. Heat Test, Operational	Temperature: 125±3 °C Duration: 1000 hours Voltage: Applied
2. Cold Test, Operational	Temperature: -40±3°C Duration: 1000 hours Voltage: Applied
3. Heat Test, Non-Operational	Temperature: 125±3°C Duration: 1000 hours Voltage: Not Applied
4. Cold Test, Non-Operational	Temperature: -40±3°C Duration:1000 hours Voltage: Not Applied
5. Thermal Shock Test, Non-Operational	Temperature: -40±3°C and 125±3°C Duration: 30 minutes each, during 5 minutes ramp, 256 cycles Voltage: Not applied
6. Temperature humidity storage	Temperature: 85±3°C Humidity: 85±3%RH Duration: 1000 hours
	Temperature: 65±3°C Humidity: 95±3%RH Duration: 168 hours
7. Free Fall Test 1.5m	Placed inside test fixture and dropped on concrete from height 1.5m. 4 times by each surface and corner
8. Vibration	4 cycles of 20 to 2000 Hz sinusoidal sweep with 20G peak acceleration lasting 12 minutes in X, Y, and Z directions
9. Mechanical Shock	5 pulses of 10000g in each of the ±X, ±Y, and ±Z directions
10. Electrostatic Discharge Test	Capacitance: 150pF Resistance: 330Ω Duration: 10 times Air Discharge: Level 4(+/-15kV) Direct contact discharge: Level 4 (+/-8kV)
11. Human Body Mode	±2000 Volt
12. Charged-Device Model	±250 Volt
13. Reflow	5 reflow cycles with peak temperature of 260℃
14. Solderability	245±5 °C ,5sec, 95% Tin on pad surface
15. Tumble test	300 tumbles from a height of 1m onto a steel base.
16. HAST	Temperature: 130±3°C Humidity: 85±3%RH Duration: 96 hours Voltage: Applied
17. Air Blow	0.45MPa, distance 3cm, time 10s

5F,No.6-1,Dusing Rd, Hsinchu Science Park,
Hsinchu City 30078,Taiwan.
Tel: (886) 3577 7509; Fax: (886) 3577 7390
Email: sales@zilltek.com

MECHANICAL SPECIFICATIOPNS

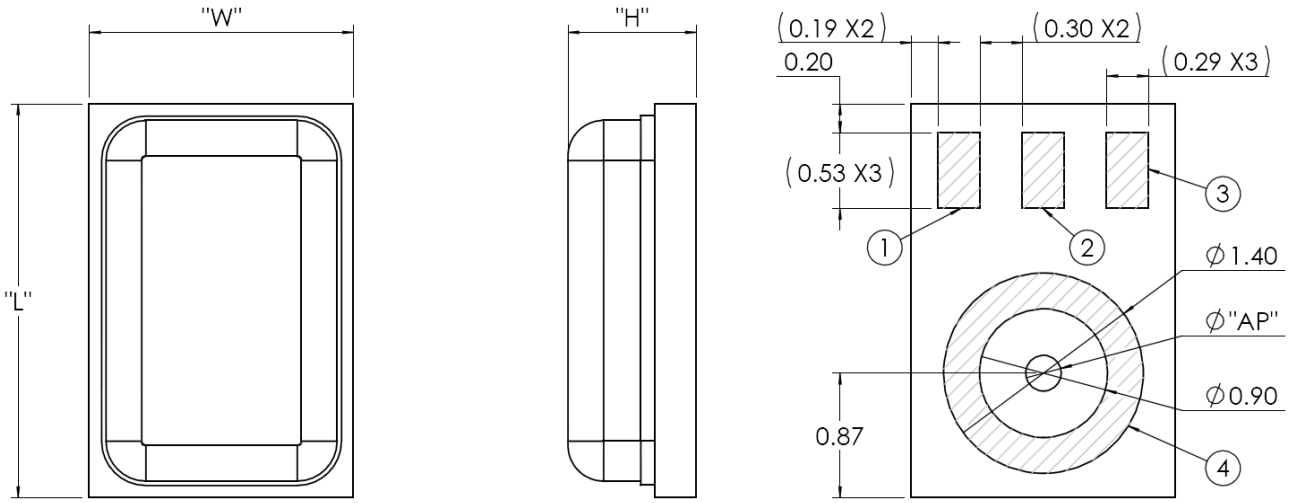

Item	Dimension	Tolerance
Length (L)	2.75	±0.10
Width (W)	1.85	±0.10
Height (H)	0.90	±0.10
Acoustic Port (AP)	Ø0.25	±0.050

Pin#	Pin Name	Type	Description
1	VDD	Power	Power Supply
2	GROUND	Ground	Ground
3	OUT	Output	Analog output signal.
4	GROUND	Ground	Ground

5F,No.6-1,Dusing Rd, Hsinchu Science Park,
Hsinchu City 30078,Taiwan.
Tel: (886) 3577 7509; Fax: (886) 3577 7390
Email: sales@zilltek.com

SOLDER FLOW PROFILE

The reflow profile specified in this section describes expected maximum heat exposure of components during the reflow process of NMP product PWBs. Temperature is measured on top of component. All components have to tolerate at least this profile five times (5x) without affecting electrical performance, mechanical performance or reliability.

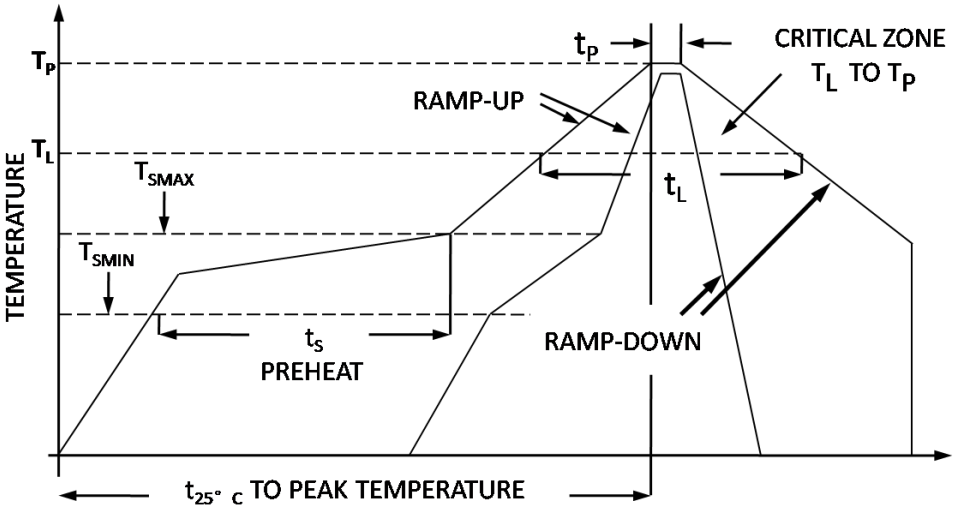

Pb-free and Sn63/Pb37 reflow profile requirements for soldering heat resistance:

Parameter		Reference	Pb-Free	Sn63/Pb37
Average Ramp Rate		T_L to T_P	1.25°C/sec max	1.25 °C /sec max
Prehear	Minimum Temperature	T_{SMIN}	100°C	100 °C
	Maximum Temperature	T_{SMAX}	200°C	150 °C
	Time	T_{SMIN} to T_{SMAX}	60sec to 120sec	60sec to 120sec
Ramp-Up Rate		T_{SMAX} to T_L	1.25°C/sec	1.25 °C /sec
Time Maintained Above Liquidous		t_L	60sec to 150sec	60sec to 150sec
Liquidous Temperature		T_L	217°C	183 °C
Peak Temperature		T_P	260°C +0°C/-5°C	215 °C +3 °C /-3 °C
Time Within +5°C of Actual Peak Temperature		t_P	20 sec to 30 sec	20 sec to 30 sec
Ramp-Down Rate		T_{peak}	6°C/sec max	6 °C /sec max
Time +25°C (t_{25OC}) to Peak Temperature			8 min max	6 min max

5F,No.6-1,Dusing Rd, Hsinchu Science Park,
Hsinchu City 30078,Taiwan.
Tel: (886) 3577 7509; Fax: (886) 3577 7390
Email: sales@zilltek.com

PACKAGING

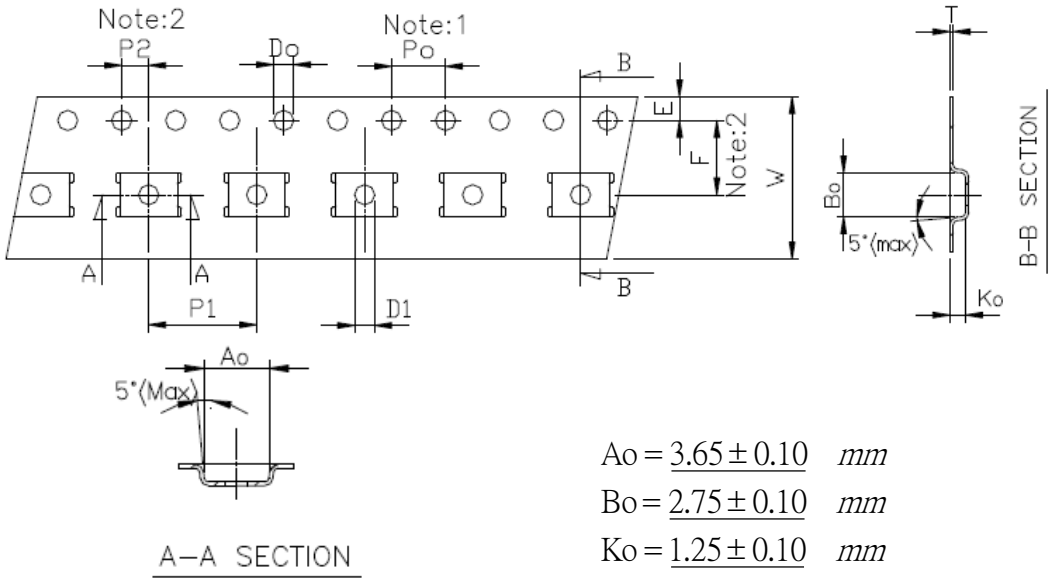

$Ao = \underline{3.65 \pm 0.10}$ *mm*

$Bo = \underline{2.75 \pm 0.10}$ *mm*

$Ko = \underline{1.25 \pm 0.10}$ *mm*

Unit：mm

Symbol	Spec.
K1	-
P_O	4.0 ± 0.10
P1	8.0 ± 0.10
P2	2.0 ± 0.05
D_O	1.55 ± 0.05
D1	1.50 (MIN)
E	1.75 ± 0.10
F	5.50 ± 0.05
$10P_O$	40.0 ± 0.10
W	12.0 ± 0.20
T	0.30 ± 0.05

Notice：

1．10 Sprocket hole pitch cumulative tolerance is ± 0.1mm.
2．Pocket position relative to sprocket hole measured as true position of pocket not pocket hole.
3．A_O & B_O measured on a place 0.3mm above the bottom of the pocket to top surface of the carrier.
4．K_O measured from a plane on the inside bottom of the pocket to the top surface of the carrier.
5．Carrier camber shall be not that 1mm per 100mm through a length of 250mm.

5F,No.6-1,Dusing Rd, Hsinchu Science Park,
Hsinchu City 30078,Taiwan.
Tel: (886) 3577 7509; Fax: (886) 3577 7390
Email: sales@zilltek.com

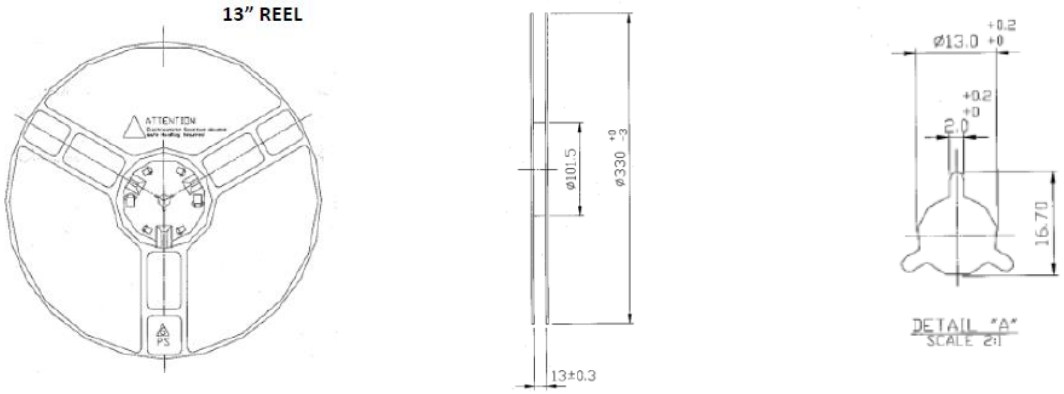

Part NO.	Reel Diameter	Quantity Per Reel	Quantity Per Inner Box	Quantity Per Outer Box
ZTS6556	13"	5200	5200	46800

Dimensions for Inner Box

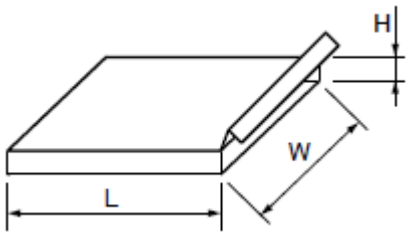

Unit：mm

L	W	H
335	339	45

Dimensions for Outer Box

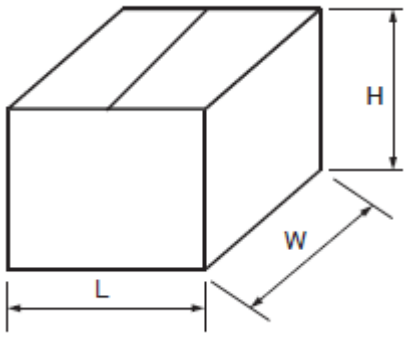

Unit：mm

L	W	H
445	360	372

5F,No.6-1,Dusing Rd, Hsinchu Science Park,
Hsinchu City 30078,Taiwan.
Tel: (886) 3577 7509; Fax: (886) 3577 7390
Email: sales@zilltek.com